MINIMUM ISOLATION DISTANCES
THE PROPOSED DRILLED BEDROCK WELL SHALL SATISFY THE FOLLOWING MINIMUM ISOLATION DISTANCES:
A. SEPTIC SYSTEMS – 100' UPSLOPE OF, 200' DOWNSLOPE OF
B. SEPTIC TANKS AND ASSOCIATED PIPING – 50'
C. DRIVEWAYS – 15'
D ALL OTHER ISOLATION AS SPECIFIED IN VERMONT WATER SUPPLY RULES, CHAPTER 21.

WELLHEAD PROTECTION SHIELD

PROPOSED DRILLED BEDROCK WELL

1" HDPE
INSULATE AND SLEEVE UNDER PLOWED AREAS

PROPOSED HOUSE LOCATION

4" PVC SDR 35 OR GREATER
MAINTAIN ¼" PER FT. MIN. SLOPE

PROPOSED 1000 GALLON CONCRETE SEPTIC TANK

CREATE SURFACE WATER DIVERSION SWALE

PROJECT BENCH MARK
SPIKE IN STUMP
ASSUMED DATUM
ELEVATION= 607.8'

SURFACE BOULDERS

PROPOSED

WASTEWATER SYSTEM ISOLATION ZONE

640 635 630 625 620 615 610 605 600 595 590

LEGEND

- SOILS TEST PIT
- PERCOLATION TEST
- REFERENCE STAKE SET FOR SYSTEM LAYOUT
- SURVEY CONTROL SPIKE
- 1' INTERVAL CONTOUR LINE
- 5' INTERVAL CONTOUR LINE
- EDGE OF GRAVEL
- 615 PROPOSED FINISHED GRADE

GRAPHIC SCALE
20 0 20 40 80
1" = 20'

STATE OF VERMONT
CRAIG D. CHASE
CST # 371
CERTIFIED SITE TECH

LOT 1 SITE PLAN
OLMSTED SUBDIVISION
219 BRAZIER ROAD
EAST MONTPELIER, VERMONT

SCALE: 1"=20'	DATE: JULY 7, 2014	PROJ.#2014-047	DWG.#14047C
DRAWN BY: CDC	CHECKED BY: DEC	FB/PG. EFB,SL818,83	SHEET L1SP

CHASE & CHASE
SURVEYORS & SEPTIC DESIGNERS INC.
301 N. MAIN ST. STE. 1 – BARRE, VT. 05641
(802)-479-9636

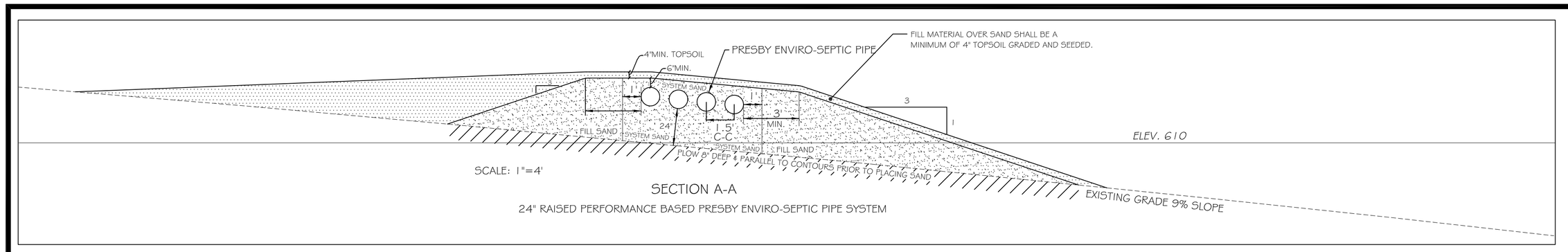

SCALE: 1"=4'

SECTION A-A

24" RAISED PERFORMANCE BASED PRESBY ENVIRO-SEPTIC PIPE SYSTEM

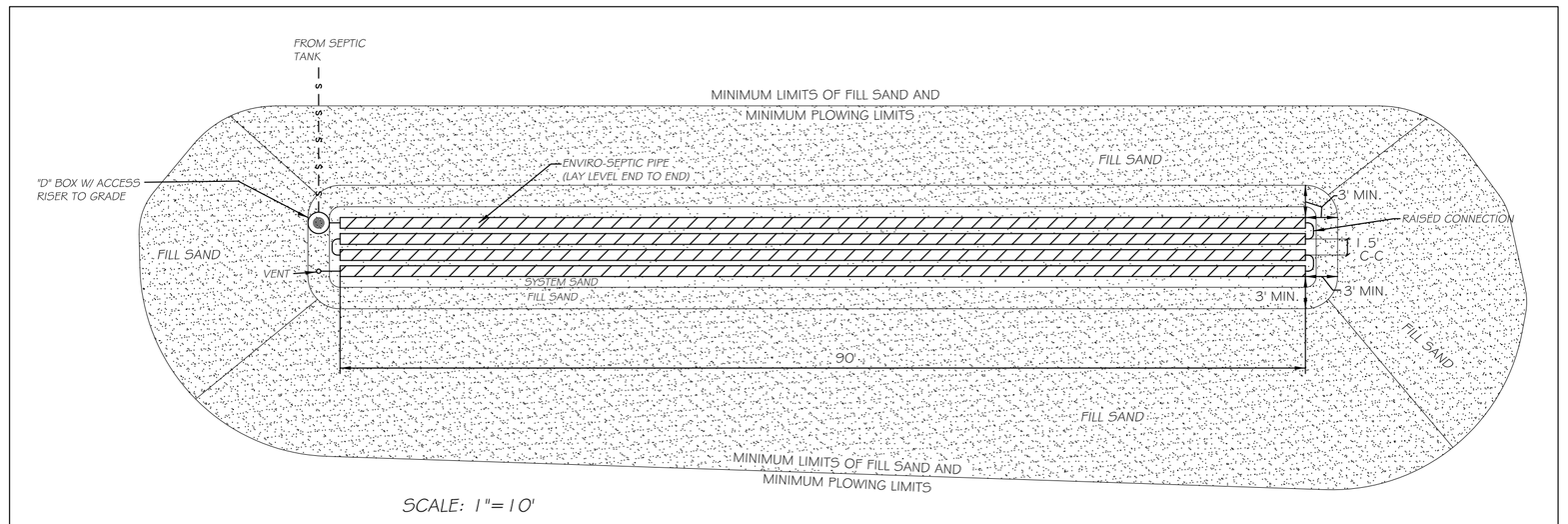

SCALE: 1"=10'

PLAN VIEW - 24" RAISED PERFORMANCE BASED PRESBY ENVIRO-SEPTIC PIPE SYSTEM

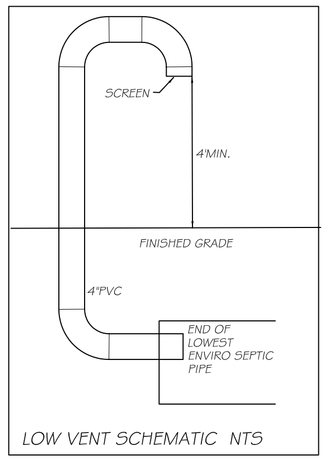

LOW VENT SCHEMATIC NTS

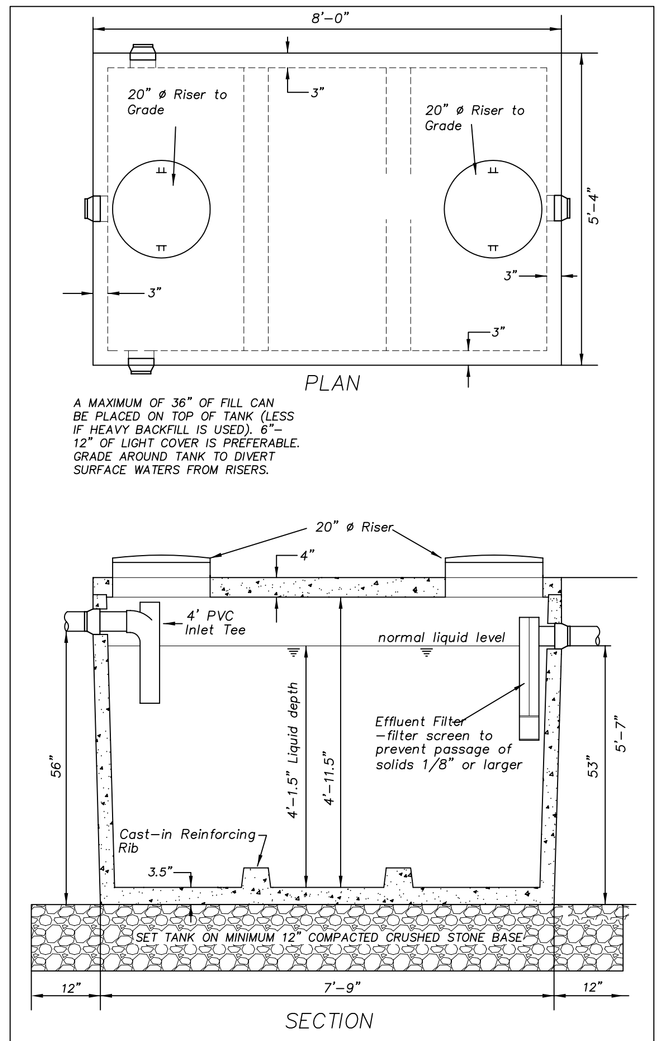

SECTION

1000 GALLON SEAMLESS CONCRETE SEPTIC TANK

not to scale

NOTES

1. INSTALLER SHALL PROVIDE DESIGNER 48HRS. NOTICE PRIOR TO BEGINNING CONSTRUCTION FOR PLAN REVIEW, AND SYSTEM LAYOUT,. AT TIME OF PLAN REVIEW A TESTING/INSPECTION SCHEDULE SHALL BE DETERMINED. THERE WILL BE A FEE FOR SYSTEM LAYOUT AND FOR INSPECTION AND REPORTS.
2. INSTALLER SHALL VERIFY ALL QUANTITIES.
3. THE AREA SURROUNDING DISPOSAL AREAS AND SEPTIC COMPONENTS SHALL BE GRADED SO AS TO DIVERT SURFACE RUNOFF WATERS.
4. THE INSTALLER SHALL PROVIDE ASBUILT TIES FOR ALL SEPTIC COMPONENTS FOR FUTURE RECOVERY IF NECESSARY.
5. ALL SEPTIC COMPONENTS SHALL BE INSTALLED IN ACCORDANCE WITH E.P.R. CHAPTER 1 & PRESBY ENVIRONMENTAL INC. DESIGN & INSTALLATION MANUAL.
6. THE SERVICE LINE FROM THE PROPOSED RESIDENCE TO THE SEPTIC TANK SHALL BE 4" PVC SDR35 & FROM THE SEPTIC TANK TO THE "D" BOX SHALL BE 4" PVC SDR35 AND SHALL MAINTAIN OF 1/4" PER FOOT SLOPE.
7. A MINIMUM DEPTH OF 5' SHALL BE MAINTAINED OVER ALL SEWER AND WATER LINES, (6.0' MIN. OVER PIPES IN PLOWED AREAS). PROVIDE INSULATION IN AREAS OF LESS THAN MINIMUM COVER.
8. ANY ALTERATION OF THESE PLANS WITHOUT THE EXPRESS WRITTEN CONSENT OF THE DESIGNER SHALL RENDER THESE PLANS NULL & VOID.
9. PRIOR TO OPERATION THE POTABLE WATER SYSTEM SHALL BE SUCCESSFULLY PRESSURE TESTED AND DISINFECTED IN ACCORDANCE WITH EPR CHAP. 21, WATER SUPPLY RULES, VERMONT DEPT. OF HEALTH REGULATIONS & SUBCHAPTER 10.9 OF THE NATIONAL PLUMBING CODE.
10. THE LOCATION OF ALL UNDERGROUND UTILITIES, IF ANY, SHALL BE CONSIDERED APPROXIMATE UNTIL CERTIFIED IN THE FIELD. THE CONTRACTOR IS ADVISED TO BE AWARE OF ALL UTILITIES NOT SHOWN THAT MAY EXIST.
11. THE SURFACE OF THE MOUND SYSTEM SHALL BE MOWED TO PREVENT ROOT GROWTH IN TO DISTRIBUTION NETWORK.
12. MOUND CONSTRUCTION SHALL BE DONE IN ACCORDANCE WITH EPR CHAP. 1.
13. SAND MUST BE CERTIFIED PRIOR TO DELIVERY AND A WRITTEN COPY OF THE SIEVE ANALYSIS SHALL BE SUBMITTED TO THE DESIGNER PRIOR TO BEGINNING CONSTRUCTION.
14. THE PROPOSED SEPTIC TANK SHALL BE FITTED WITH AN EFFLUENT FILTER THAT PREVENTS THE PASSAGE OF ANY PARTICLE LARGER THAN 1/8 OF AN INCH.
15. ALL PRESBY PRODUCTS MUST BE INSTALLED BY A PRESBY CERTIFIED INSTALLER. CONTACT PRESBY ENVIRONMENTAL INC. (1-800-473-5298) FOR MORE INFORMATION.
16. THIS SYSTEM IS NOT DESIGNED FOR USE OF A GARBAGE DISPOSAL.

BASIS OF DESIGN CALCULATIONS

4 BEDROOM SINGLE FAMILY RESIDENCE = 490 GPD
+ 6 STUDENT YOGA STUDIO= 90 (TOTAL 580 GPD)

PRESBY CALCULATIONS FROM DESIGN MANUAL
TABLE A (PERC RATE = 11MIN/INCH)
240+60 = 300LF MINIMUM
TABLE B (SLOPE = 9%AVG.)
1.5' C-C MIN. PIPE SPACING
TABLE C
90' PIPE LENGTHS = 4 LINES = 360 LF = 5.5' WIDTH
TABLE D
354 + 73= 427 SF MIN.
(90'+2')(5.5'+2')= 690 SF DESIGNED

DESIGNED = PRESBY MOUND WITH 24" SAND UNDER 90' LONG PRESBY PIPES (580GPD\90'= 6.44 GPD PER LF.)

LINEAR LOADING RATE CALCULATIONS
580 GPD 9% SLOPE ESHWT 18"
SOIL =VFSL F=13.5
18"-12" (DRY)= 6" OR 0.5'
13.5 X .5 = 6.75 GPD/LF/MAX.
580\6.75= 85.9LF MIN. 90LF DESIGNED

SYSTEM SAND SHALL MEET ASTM STANDARD: C-33* (CONCRETE SAND)
* NO MORE THAN 2% SHALL PASS #200 SIEVE

SIEVE SIZE	% PASSING
4	95 - 100
8	80 - 100
16	50 - 85
30	25 - 60
50	10 - 30
100	2 - 10

OR

FILL SAND MATERIAL SPECIFICATION

SIEVE SIZE	% PASSING
10	85 - 100
40	25 - 75
60	0 - 30
100	0 - 10
200	0 - 5

OR

SIEVE SIZE	% PASSING
4	95 - 100
8	80 - 100
16	50 - 85
30	25 - 60
50	10 - 30
100	2 - 10

OR

SIEVE SIZE	% PASSING
10	85 - 100
40	30 - 50
200	0 - 10

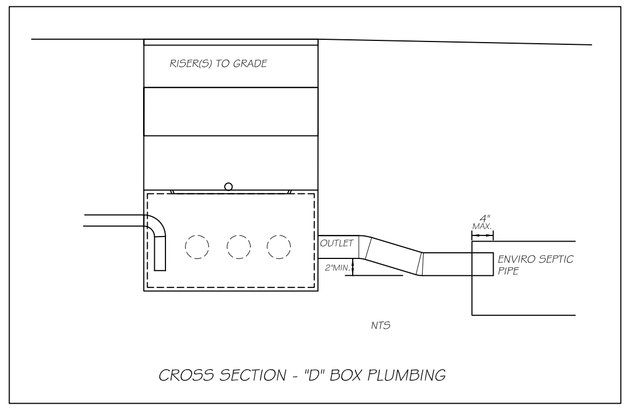

CROSS SECTION - "D" BOX PLUMBING

SOILS TEST PIT DATA
TEST PITS DUG 6\25\2014
AS LOGGED BY C. CHASE & OBSERVED BY
ANR REGIONAL ENGINEER C. FULLER

STP 1
0-10" DARK BROWN FINE SANDY LOAM (TOPSOIL) - LOOSE/FRIABLE MANY ROOTS
10-22" BROWN VERY FINE SANDY LOAM - LOOSE/FRIABLE MANY ROOTS
22-46" GRAY SILT LOAM- FIRM- FEW ROOTS- FAINT REDOX FEATURES
ESHWT 22" DENSITY NLTD
STP 2
0-8" DARK BROWN FINE SANDY LOAM (TOPSOIL) - LOOSE/FRIABLE MANY ROOTS
8-18" BROWN VERY FINE SANDY LOAM - LOOSE/FRIABLE MANY ROOTS
18-40" GRAY SILT LOAM- FIRM- MANY ROOTS- FAINT REDOX FEATURES
ESHWT 18" DENSITY NLTD
STP 3
0-12" DARK BROWN FINE SANDY LOAM (TOPSOIL) - LOOSE/FRIABLE MANY ROOTS
12-25" BROWN VERY FINE SANDY LOAM - LOOSE/FRIABLE MANY ROOTS
25-48" GRAY SILT LOAM- FIRM- FEW ROOTS- FAINT REDOX FEATURES
ESHWT 25" DENSITY NLTD
STP 4
0-8" DARK BROWN FINE SANDY LOAM (TOPSOIL) - LOOSE/FRIABLE MANY ROOTS
8-18" BROWN VERY FINE SANDY LOAM - LOOSE/FRIABLE MANY ROOTS
18-36" GRAY SILT LOAM- FIRM- FEW ROOTS- FAINT REDOX FEATURES
ESHWT 18" DENSITY NLTD
STP 2
0-8" DARK BROWN FINE SANDY LOAM (TOPSOIL) - LOOSE/FRIABLE MANY ROOTS
8-20" BROWN VERY FINE SANDY LOAM - LOOSE/FRIABLE MANY ROOTS
20-46" GRAY SILT LOAM- FIRM- FEW ROOTS- FAINT REDOX FEATURES
ESHWT 20" DENSITY NLTD

PERCOLATION TEST DATA
#1= 19 MIN/INCH @ 18"
#2= 11 MIN/INCH @ 18"

INSTALLATION NOTES:
1. INSERT PVC PIPE NO MORE THAN 4" INTO OFFSET ADAPTER TO PREVENT AIR LOCKING.
2. INSTALL THE RAISED CONNECTION SO THAT THE TOP OF THE 90° BEND IS LEVEL WITH THE TOP OF THE OFFSET ADAPTER.
3. PACK SAND UNDER AND AROUND THE RAISED CONNECTION TO PREVENT MOVEMENT.

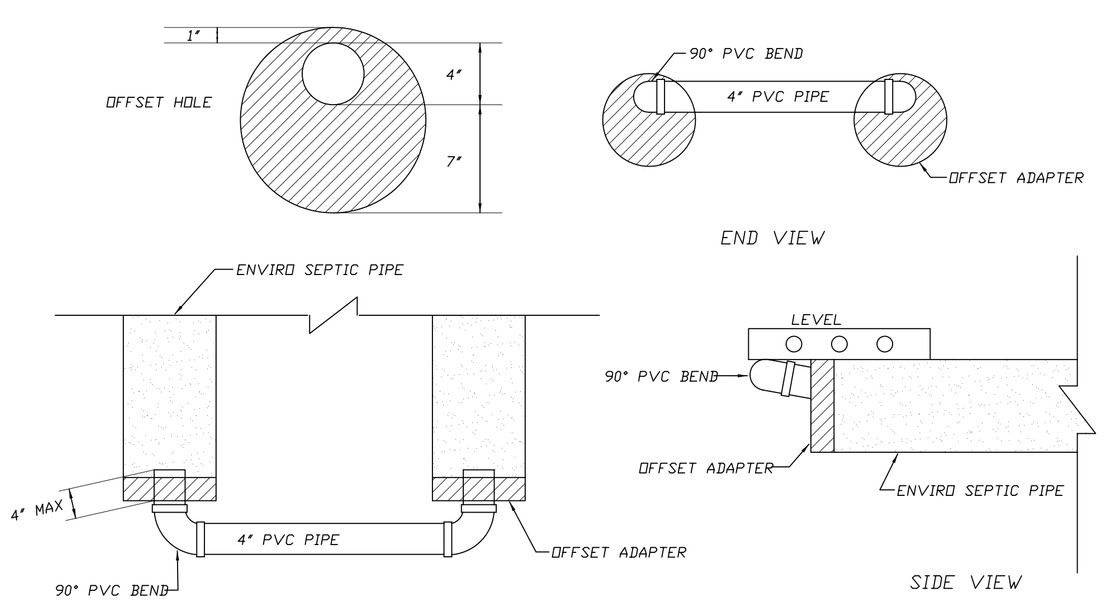

RAISED CONNECTION DETAILS

NTS

INSTALLER CERTIFICATION:

I, _____, INSTALLED, TESTED, AND INSPECTED THE WASTEWATER SYSTEM FOR THE OLMSTED RESIDENCE ON LOT 1, BRAZIER ROAD IN EAST MONTPELIER, VERMONT AND I HEREBY CERTIFY THAT IN THE EXERCISE OF MY REASONABLE AND PROFESSIONAL JUDGMENT THE INSTALLATION RELATED INFORMATION SUBMITTED IS TRUE AND CORRECT AND THE WASTEWATER SYSTEM WAS INSTALLED IN ACCORDANCE WITH THE PERMITTED DESIGN AND ALL PERMIT CONDITIONS, WAS INSPECTED, WAS PROPERLY TESTED, AND HAS SUCCESSFULLY MET THOSE PERFORMANCE TESTS.

DATED: _____ SIGNATURE: _____

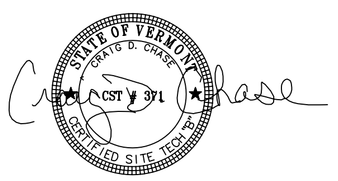

LOT 1 DETAILS SHEET
OLMSTED SUBDIVISION
219 BRAZIER ROAD
EAST MONTPELIER, VERMONT

SCALE: AS NOTED	DATE: JULY 7, 2014	PROJ.#2014-047	DWG.#14047E
DRAWN BY: CDC	CHECKED BY: DEC	FB/PG. EFB,SLB18,83	SHEET DTLS1

CHASE & CHASE
SURVEYORS & SEPTIC DESIGNERS INC.
301 N. MAIN ST. STE. 1 – BARRE, VT. 05641
(802)-479-9636

SOILS TEST PIT DATA
TEST PITS DUG 6-25-14
AS LOGGED BY C. CHASE &
OBSERVED BY ANR REG. ENG. C. FULLER

STP 6
0-8" DARK BROWN FINE SANDY LOAM - TOPSOIL/DUFF - LOOSE/FRIABLE - MANY ROOTS
8-18" BROWN VERY FINE SANDY LOAM - LOOSE/FRIABLE - MANY ROOTS
18-45" GRAY SILT LOAM - FIRM - FEW ROOTS
ESHWT 18" BASED ON DENSITY - NLTD
STP 7
0-8" DARK BROWN FINE SANDY LOAM - TOPSOIL/DUFF - LOOSE/FRIABLE - MANY ROOTS
8-18" BROWN VERY FINE SANDY LOAM - LOOSE/FRIABLE - MANY ROOTS
18-38" GRAY SILT LOAM - FIRM - FEW ROOTS
ESHWT 18" BASED ON DENSITY - NLTD
STP 8
0-6" DARK BROWN FINE SANDY LOAM - TOPSOIL/DUFF - LOOSE/FRIABLE - MANY ROOTS
6-12" BROWN VERY FINE SANDY LOAM - LOOSE/FRIABLE - MANY ROOTS
12-36" GRAY SILT LOAM - FIRM - FEW ROOTS
ESHWT 12" BASED ON DENSITY - NLTD

DESIGNATED REPLACEMENT AREA BASIS OF DESIGN
DAILY FLOW = 420 GPD APPLICATION RATE= 1.0 GPD/SF
AREA REQUIRED= 420 SF
SLOPE= 15% SOIL= VFSL
H=12"-6"=6" OR 0.5'
F=26.2
LLR= 26.2 X 0.5= 13.1
420/13.1= 32' MIN.
AS SHOWN ON SITE PLAN: FOOTPRINT OF 30" MOUND WITH (2) 4'x55' (440 SF) TRENCHES 420/55= 7.64GPD/LF

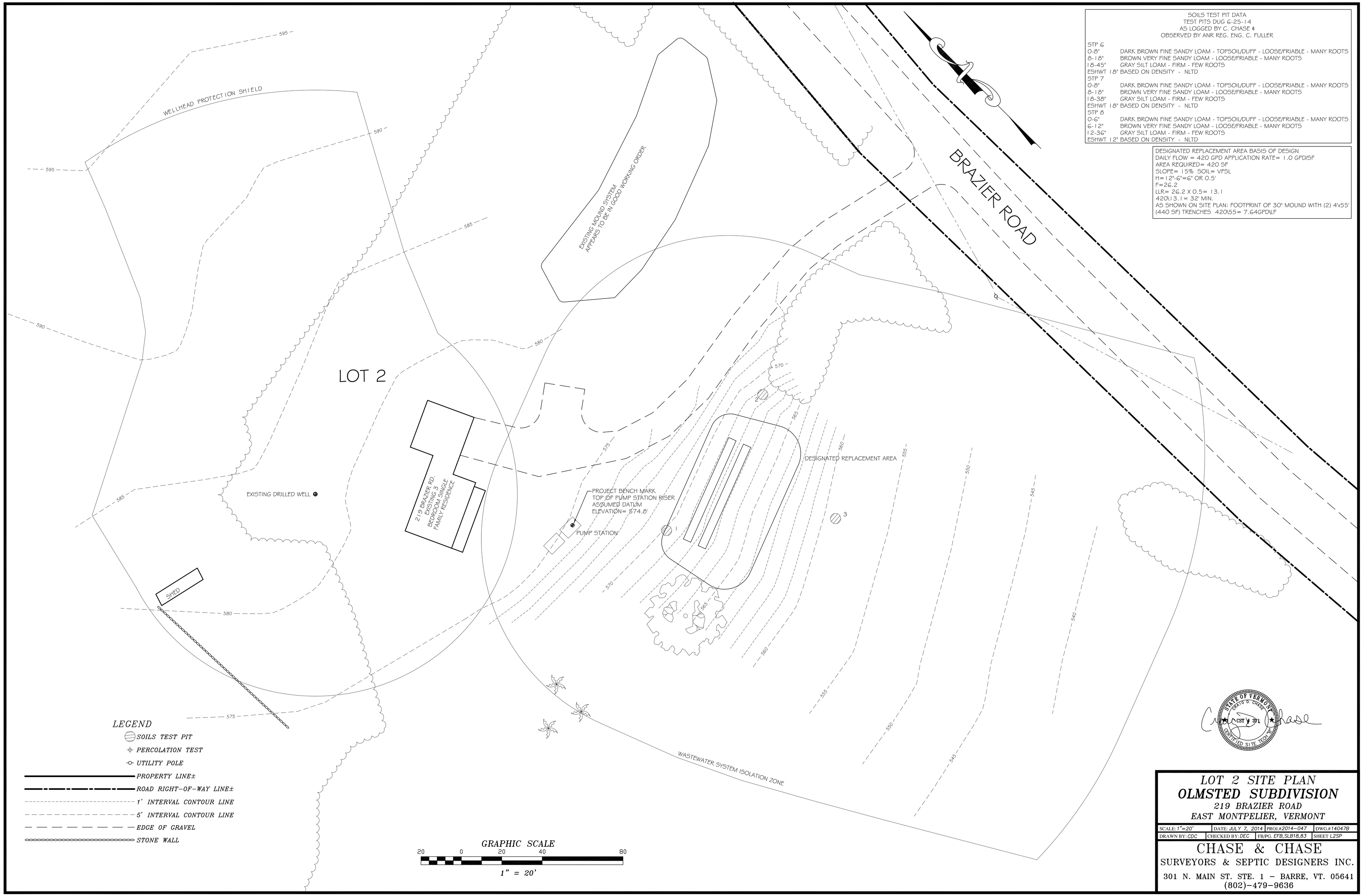

LOT 2 SITE PLAN
OLMSTED SUBDIVISION
219 BRAZIER ROAD
EAST MONTPELIER, VERMONT

SCALE: 1"=20'	DATE: JULY 7, 2014	PROJ.#2014-047	DWG.#14047B
DRAWN BY: CDC	CHECKED BY: DEC	FB/PG. EFB,SLB18,83	SHEET L2SP

CHASE & CHASE
SURVEYORS & SEPTIC DESIGNERS INC.
301 N. MAIN ST. STE. 1 – BARRE, VT. 05641
(802)-479-9636